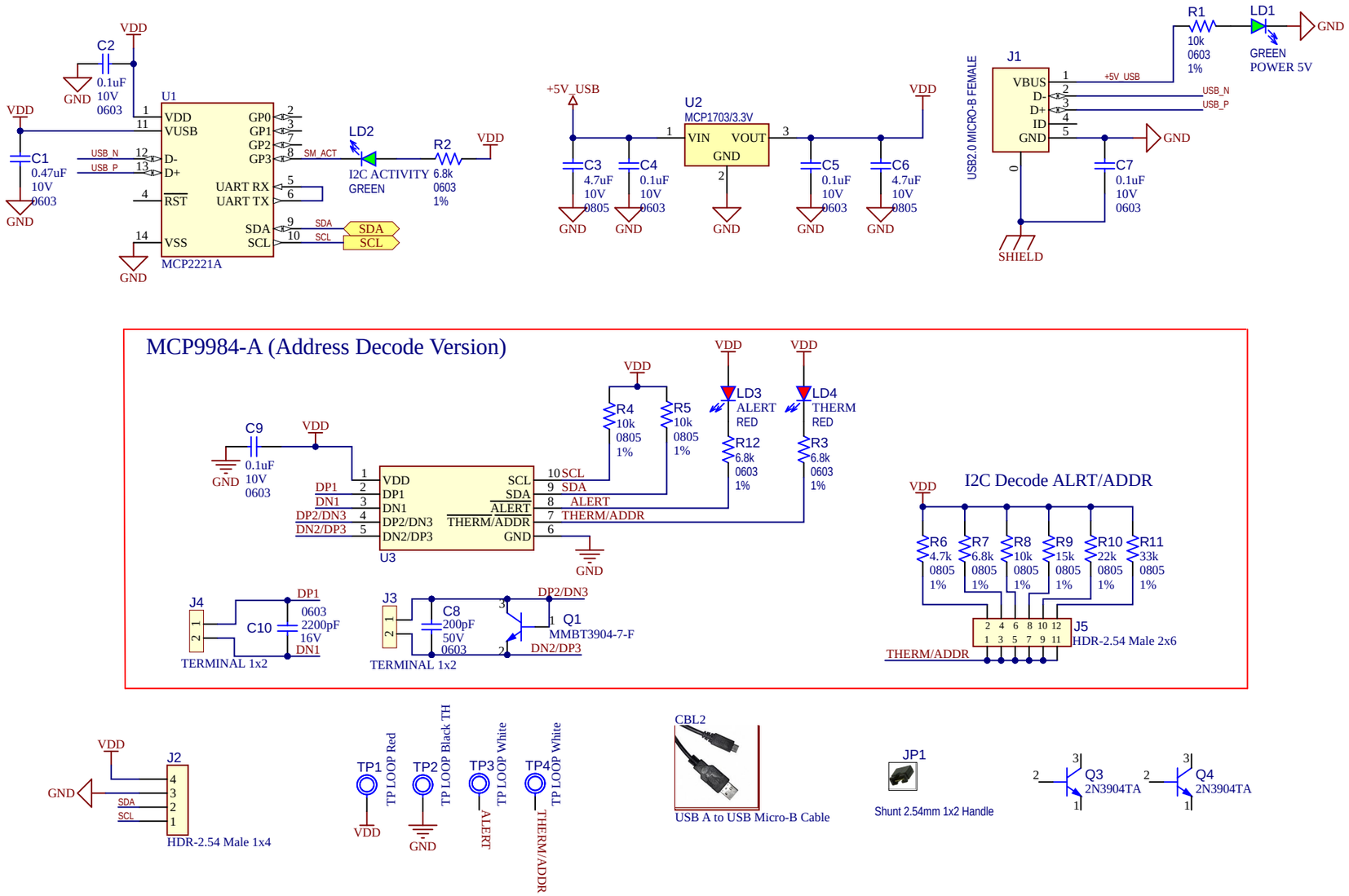

LABEL1

[ASSY# / REV]
SN: [SERIAL]
[DATE yyyy.mm.dd]

PCBA LABEL 18X6mm

Project Owner: Eric Staples			
PCB Layout Contact: Eric Staples			
PartNumber: EV23P16A	Project Title: MCP998X-A Temp Sensor EVB	Variant: [No Variations]	
Sheet Title: **			Designed with Altium
Size B	SCH #: 02-00951	Rev: 1	Date: 11/9/2023
	PCB #: 04-12024	Rev: 1	Sheet 1 of 1
File: 02-00951.SchDoc			Altium.com