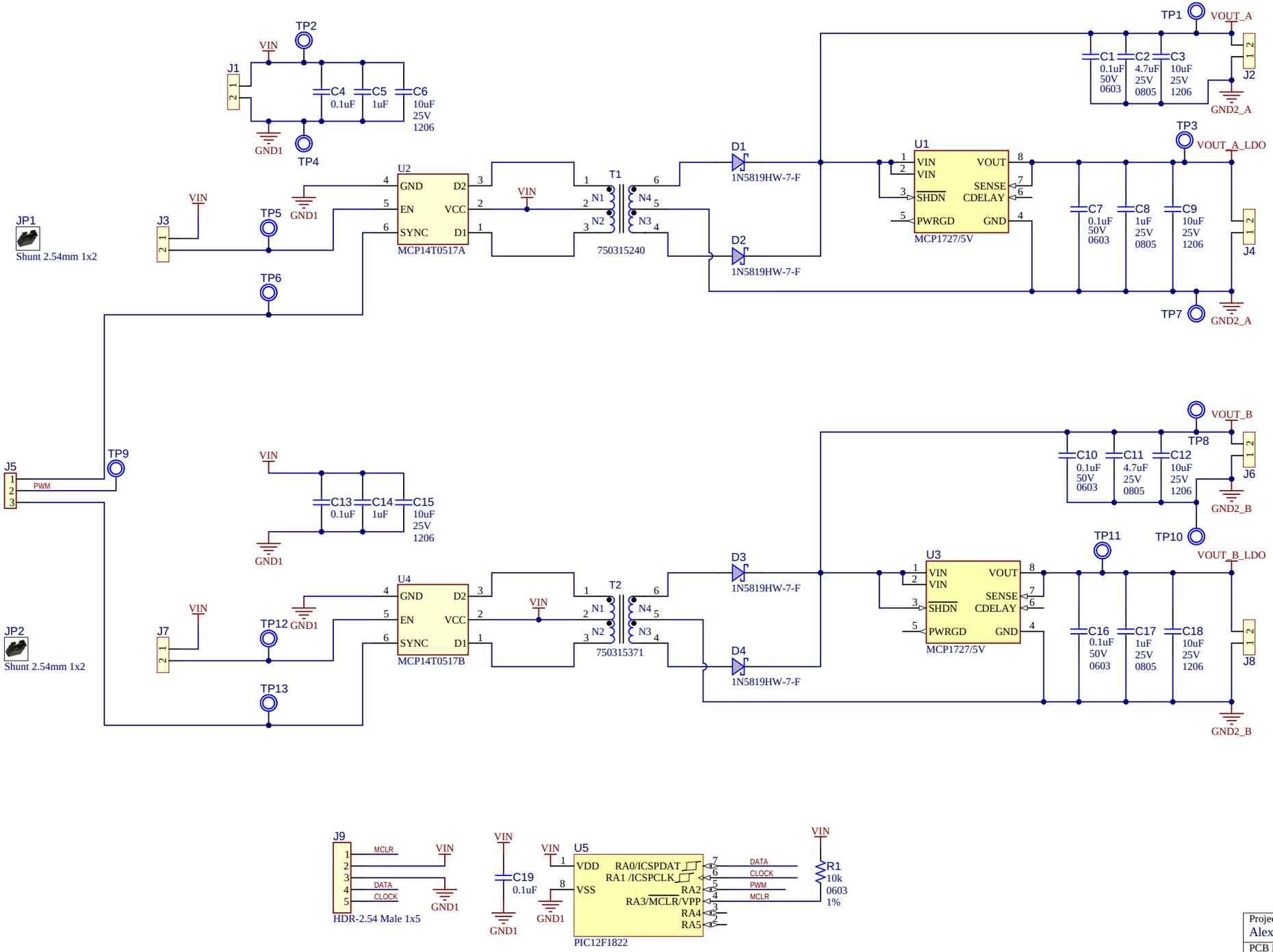

Project Owner: Alexandru Iordache			
PCB Layout Contact: Alexandru Iordache			
PartNumber: EV76D05A	Project Title: MCP14T0517A/B EVB	Variant: V1	
Sheet Title: **			
Size B	SCH #: 02-01415	Rev: 1	Date: 3/12/2025
	PCB #: 04-12472	Rev: 1	Sheet 1 of 1
File: SCH_EVB_MCP14T0517_A_B.SchDoc			

Designed with Altium
Altium.com