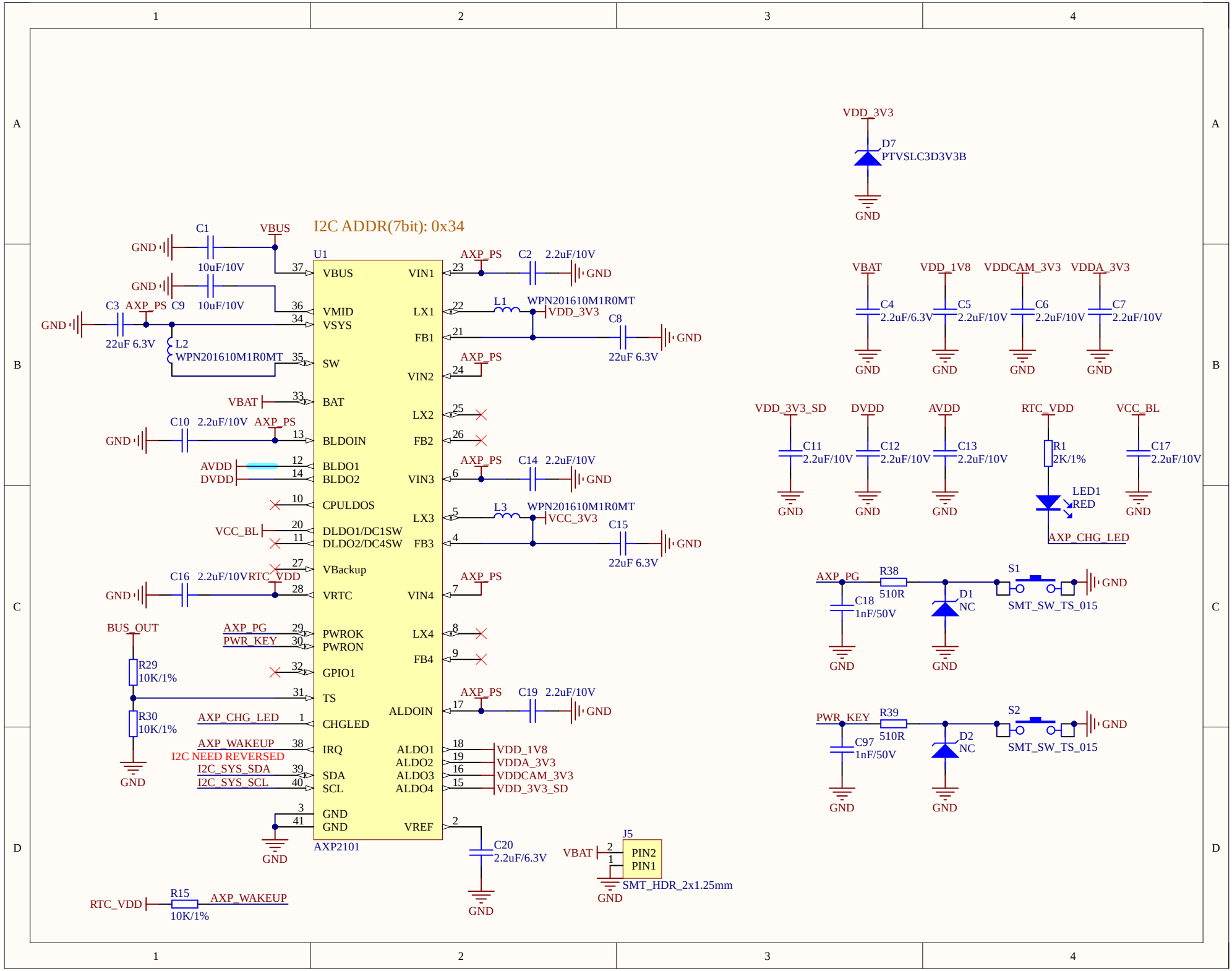
I2C ADDR(7bit): 0x34
U1
AXP2101
VBUS
VMID
VSYS
SW
BAT
BLDOIN
BLDO1
BLDO2
CPULDOS
DLDO1/DC1SW
DLDO2/DC4SW
VBackup
VRTC
PWROK
PWRON
GPIO1
TS
CHGLED
IRQ
SDA
SCL
GND
GND
VIN1
LX1
FB1
VIN2
LX2
FB2
VIN3
LX3
FB3
VIN4
LX4
FB4
ALDOIN
ALDO1
ALDO2
ALDO3
ALDO4
VREF
C1 10uF/10V
C3 22uF 6.3V
C9 10uF/10V
L2 WPN201610M1R0MT
C10 2.2uF/10V
C16 2.2uF/10V
R29 10K/1%
R30 10K/1%
R15 10K/1%
C2 2.2uF/10V
L1 WPN201610M1R0MT
C8 22uF 6.3V
C14 2.2uF/10V
L3 WPN201610M1R0MT
C15 22uF 6.3V
C19 2.2uF/10V
C20 2.2uF/6.3V
J5
PIN2
PIN1
SMT_HDR_2x1.25mm
VDD_1V8
VDDA_3V3
VDDCAM_3V3
VDD_3V3_SD
VDD_3V3
D7 PTVSLC3D3V3B
C4 2.2uF/6.3V
C5 2.2uF/10V
C6 2.2uF/10V
C7 2.2uF/10V
C11 2.2uF/10V
C12 2.2uF/10V
C13 2.2uF/10V
R1 2K/1%
LED1 RED
C17 2.2uF/10V
AXP_CHG_LED
R38 510R
C18 1nF/50V
D1 NC
S1 SMT_SW_TS_015
R39 510R
C97 1nF/50V
D2 NC
S2 SMT_SW_TS_015
BUS_OUT
AXP_PG
PWR_KEY
AXP_CHG_LED
AXP_WAKEUP
I2C NEED REVERSED
I2C_SYS_SDA
I2C_SYS_SCL
RTC_VDD
AXP_PS
VBAT
AVDD
DVDD
VCC_BL
VCC_3V3
GND

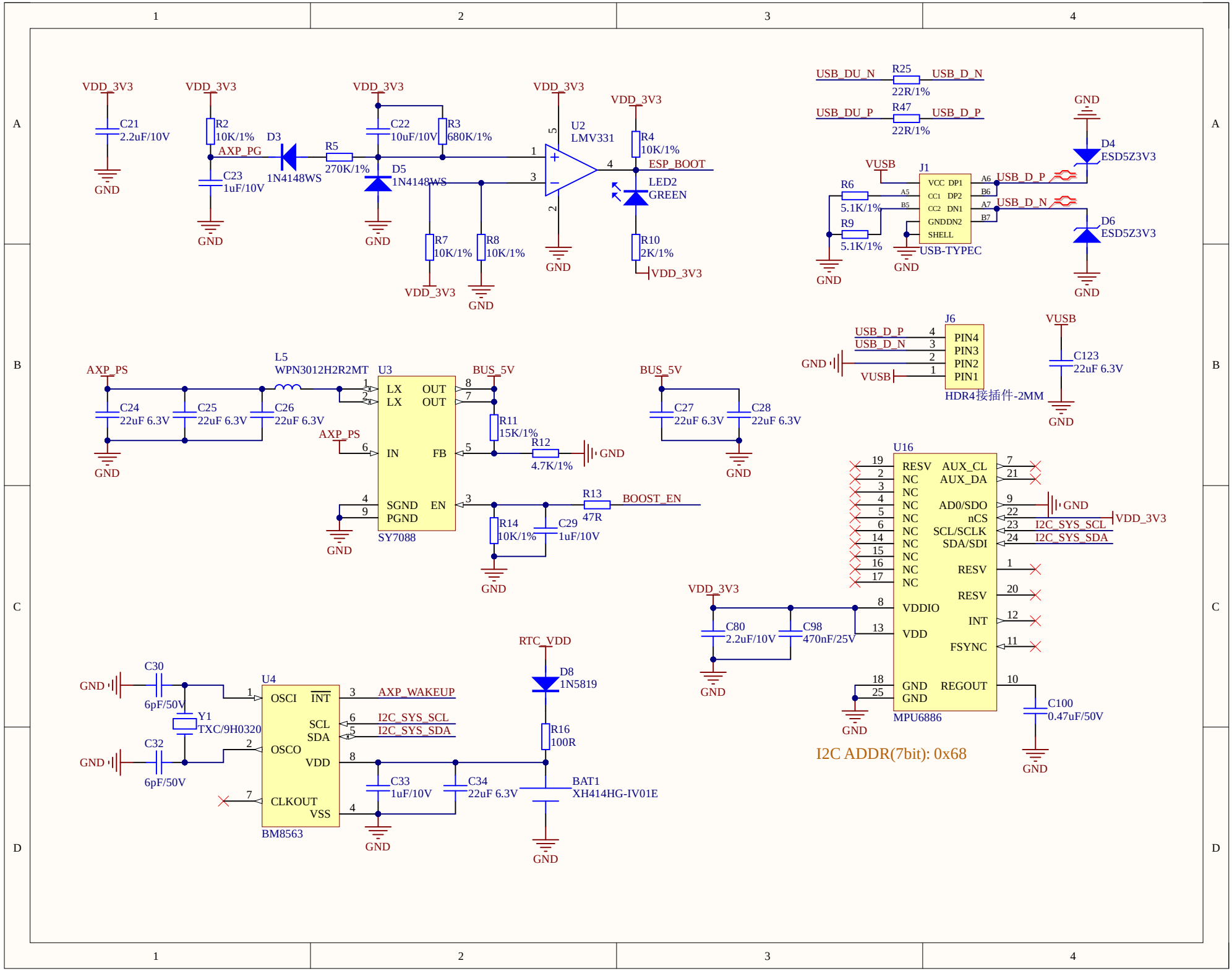
VDD_3V3
C21
2.2uF/10V
GND
R2
10K/1%
AXP_PG
C23
1uF/10V
D3
1N4148WS
R5
270K/1%
C22
10uF/10V
R3
680K/1%
D5
1N4148WS
R7
10K/1%
R8
10K/1%
U2
LMV331
R4
10K/1%
ESP_BOOT
LED2
GREEN
R10
2K/1%
USB_DU_N
R25
22R/1%
USB_D_N
USB_DU_P
R47
22R/1%
USB_D_P
D4
ESD5Z3V3
D6
ESD5Z3V3
VUSB
J1
VCC DP1
CC1 DP2
CC2 DN1
GNDDN2
SHELL
A6
B6
A7
B7
A5
B5
R6
5.1K/1%
R9
5.1K/1%
USB-TYPEC
J6
PIN4
PIN3
PIN2
PIN1
HDR4接插件-2MM
C123
22uF 6.3V
AXP_PS
L5
WPN3012H2R2MT
U3
LX
OUT
IN
FB
SGND
EN
PGND
SY7088
BUS_5V
C24
22uF 6.3V
C25
22uF 6.3V
C26
22uF 6.3V
R11
15K/1%
R12
4.7K/1%
C27
22uF 6.3V
C28
22uF 6.3V
R13
47R
BOOST_EN
R14
10K/1%
C29
1uF/10V
U16
RESV
NC
AUX_CL
AUX_DA
AD0/SDO
nCS
SCL/SCLK
SDA/SDI
I2C_SYS_SCL
I2C_SYS_SDA
VDDIO
VDD
INT
FSYNC
GND
REGOUT
MPU6886
C80
2.2uF/10V
C98
470nF/25V
C100
0.47uF/50V
I2C ADDR(7bit): 0x68
C30
6pF/50V
Y1
TXC/9H0320
C32
6pF/50V
U4
OSCI
INT
SCL
SDA
OSCO
VDD
CLKOUT
VSS
BM8563
AXP_WAKEUP
RTC_VDD
D8
1N5819
R16
100R
C33
1uF/10V
C34
22uF 6.3V
BAT1
XH414HG-IV01E

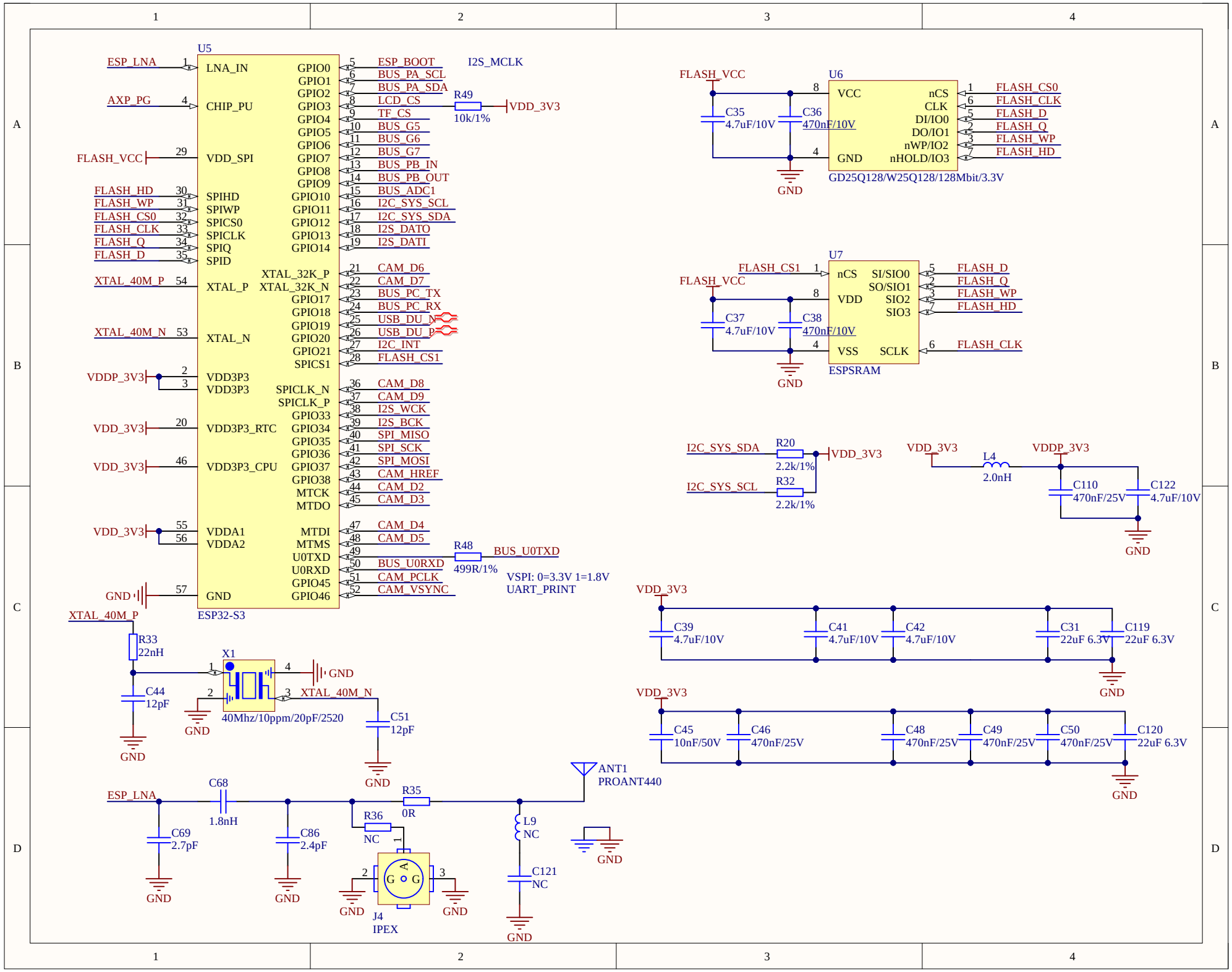
U5
ESP32-S3
ESP_LNA
AXP_PG
FLASH_VCC
FLASH_HD
FLASH_WP
FLASH_CS0
FLASH_CLK
FLASH_Q
FLASH_D
XTAL_40M_P
XTAL_40M_N
VDDP_3V3
VDD_3V3
GND
LNA_IN
CHIP_PU
VDD_SPI
SPIHD
SPIWP
SPICS0
SPICLK
SPIQ
SPID
XTAL_P
XTAL_N
VDD3P3
VDD3P3_RTC
VDD3P3_CPU
VDDA1
VDDA2
ESP_BOOT
BUS_PA_SCL
BUS_PA_SDA
LCD_CS
TF_CS
BUS_G5
BUS_G6
BUS_G7
BUS_PB_IN
BUS_PB_OUT
BUS_ADC1
I2C_SYS_SCL
I2C_SYS_SDA
I2S_DATO
I2S_DATI
CAM_D6
CAM_D7
BUS_PC_TX
BUS_PC_RX
USB_DU_N
USB_DU_P
I2C_INT
FLASH_CS1
CAM_D8
CAM_D9
I2S_WCK
I2S_BCK
SPI_MISO
SPI_SCK
SPI_MOSI
CAM_HREF
CAM_D2
CAM_D3
CAM_D4
CAM_D5
BUS_U0TXD
BUS_U0RXD
CAM_PCLK
CAM_VSYNC
I2S_MCLK
R49
10k/1%
R48
499R/1%
VSPI: 0=3.3V 1=1.8V
UART_PRINT
U6
GD25Q128/W25Q128/128Mbit/3.3V
C35
4.7uF/10V
C36
470nF/10V
U7
ESPSRAM
C37
4.7uF/10V
C38
470nF/10V
R20
2.2k/1%
R32
2.2k/1%
L4
2.0nH
C110
470nF/25V
C122
4.7uF/10V
C39
4.7uF/10V
C41
4.7uF/10V
C42
4.7uF/10V
C31
22uF 6.3V
C119
22uF 6.3V
C45
10nF/50V
C46
470nF/25V
C48
470nF/25V
C49
470nF/25V
C50
470nF/25V
C120
22uF 6.3V
R33
22nH
C44
12pF
X1
40Mhz/10ppm/20pF/2520
C51
12pF
C68
1.8nH
C69
2.7pF
C86
2.4pF
R35
0R
R36
NC
L9
NC
C121
NC
ANT1
PROANT440
J4
IPEX

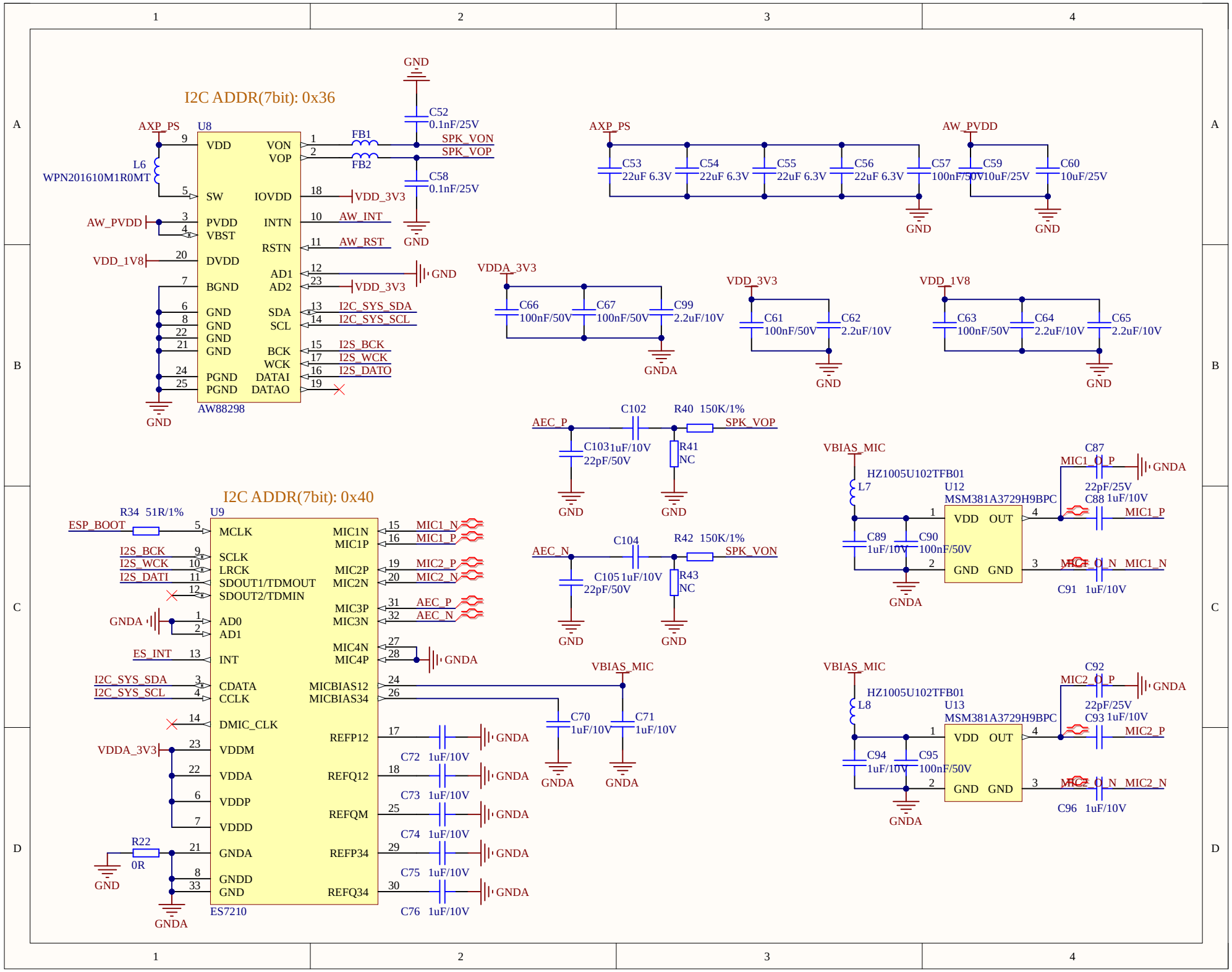
I2C ADDR(7bit): 0x36
U8
AW88298
AXP_PS
AW_PVDD
VDD_1V8
L6
WPN201610M1R0MT
VDD
SW
PVDD
VBST
DVDD
BGND
GND
PGND
VON
VOP
IOVDD
INTN
RSTN
AD1
AD2
SDA
SCL
BCK
WCK
DATAI
DATAO
FB1
FB2
SPK_VON
SPK_VOP
VDD_3V3
AW_INT
AW_RST
I2C_SYS_SDA
I2C_SYS_SCL
I2S_BCK
I2S_WCK
I2S_DATO
C52 0.1nF/25V
C58 0.1nF/25V
C53 22uF 6.3V
C54 22uF 6.3V
C55 22uF 6.3V
C56 22uF 6.3V
C57 100nF/50V
C59 10uF/25V
C60 10uF/25V
VDDA_3V3
C66 100nF/50V
C67 100nF/50V
C99 2.2uF/10V
GNDA
C61 100nF/50V
C62 2.2uF/10V
C63 100nF/50V
C64 2.2uF/10V
C65 2.2uF/10V
AEC_P
AEC_N
C102
R40 150K/1%
C103 1uF/10V
22pF/50V
R41
NC
C104
R42 150K/1%
C105 1uF/10V
22pF/50V
R43
NC
VBIAS_MIC
HZ1005U102TFB01
L7
U12
MSM381A3729H9BPC
VDD
OUT
GND
C87
MIC1_O_P
22pF/25V
C88 1uF/10V
MIC1_P
C89 1uF/10V
C90 100nF/50V
MIC1_O_N
MIC1_N
C91 1uF/10V
I2C ADDR(7bit): 0x40
U9
ES7210
R34 51R/1%
ESP_BOOT
MCLK
SCLK
LRCK
SDOUT1/TDMOUT
SDOUT2/TDMIN
AD0
AD1
INT
CDATA
CCLK
DMIC_CLK
VDDM
VDDA
VDDP
VDDD
GNDA
GNDD
MIC1N
MIC1P
MIC2P
MIC2N
MIC3P
MIC3N
MIC4N
MIC4P
MICBIAS12
MICBIAS34
REFP12
REFQ12
REFQM
REFP34
REFQ34
MIC1_N
MIC1_P
MIC2_P
MIC2_N
AEC_P
AEC_N
ES_INT
I2C_SYS_SDA
I2C_SYS_SCL
I2S_BCK
I2S_WCK
I2S_DATI
R22
0R
C70 1uF/10V
C71 1uF/10V
C72 1uF/10V
C73 1uF/10V
C74 1uF/10V
C75 1uF/10V
C76 1uF/10V
HZ1005U102TFB01
L8
U13
MSM381A3729H9BPC
C92
MIC2_O_P
22pF/25V
C93 1uF/10V
MIC2_P
C94 1uF/10V
C95 100nF/50V
MIC2_O_N
MIC2_N
C96 1uF/10V

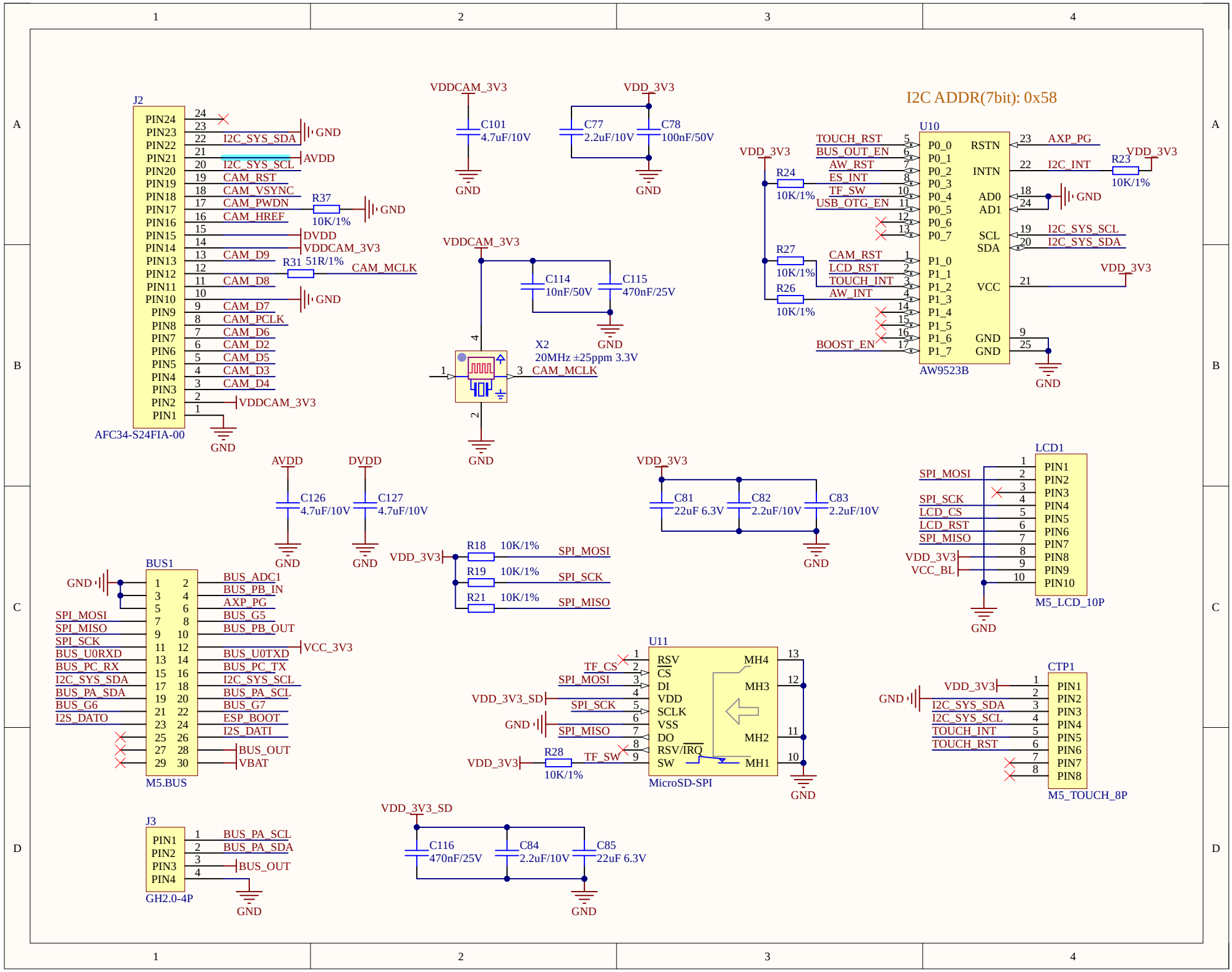
I2C ADDR(7bit): 0x58
J2
AFC34-S24FIA-00
PIN24 PIN23 PIN22 PIN21 PIN20 PIN19 PIN18 PIN17 PIN16 PIN15 PIN14 PIN13 PIN12 PIN11 PIN10 PIN9 PIN8 PIN7 PIN6 PIN5 PIN4 PIN3 PIN2 PIN1
I2C_SYS_SDA
I2C_SYS_SCL
CAM_RST
CAM_VSYNC
CAM_PWDN
CAM_HREF
CAM_D9
CAM_D8
CAM_D7
CAM_PCLK
CAM_D6
CAM_D2
CAM_D5
CAM_D3
CAM_D4
CAM_MCLK
GND
AVDD
DVDD
VDDCAM_3V3
R37 10K/1%
R31 51R/1%
VDDCAM_3V3
C101 4.7uF/10V
C77 2.2uF/10V
C78 100nF/50V
VDD_3V3
C114 10nF/50V
C115 470nF/25V
X2
20MHz ±25ppm 3.3V
CAM_MCLK
U10
AW9523B
P0_0 P0_1 P0_2 P0_3 P0_4 P0_5 P0_6 P0_7
P1_0 P1_1 P1_2 P1_3 P1_4 P1_5 P1_6 P1_7
RSTN INTN AD0 AD1 SCL SDA VCC GND GND
TOUCH_RST BUS_OUT_EN AW_RST ES_INT TF_SW USB_OTG_EN
CAM_RST LCD_RST TOUCH_INT AW_INT BOOST_EN
AXP_PG
I2C_INT
I2C_SYS_SCL
I2C_SYS_SDA
R24 10K/1%
R27 10K/1%
R26 10K/1%
R23 10K/1%
C126 4.7uF/10V
C127 4.7uF/10V
C81 22uF 6.3V
C82 2.2uF/10V
C83 2.2uF/10V
R18 10K/1%
R19 10K/1%
R21 10K/1%
SPI_MOSI
SPI_SCK
SPI_MISO
LCD1
M5_LCD_10P
PIN1 PIN2 PIN3 PIN4 PIN5 PIN6 PIN7 PIN8 PIN9 PIN10
LCD_CS
VCC_BL
BUS1
M5.BUS
BUS_ADC1
BUS_PB_IN
AXP_PG
BUS_G5
BUS_PB_OUT
VCC_3V3
BUS_U0RXD
BUS_U0TXD
BUS_PC_RX
BUS_PC_TX
BUS_PA_SDA
BUS_PA_SCL
BUS_G6
BUS_G7
I2S_DATO
ESP_BOOT
I2S_DATI
BUS_OUT
VBAT
U11
MicroSD-SPI
RSV CS DI VDD SCLK VSS DO RSV/IRQ SW
MH4 MH3 MH2 MH1
TF_CS
VDD_3V3_SD
R28 10K/1%
TF_SW
CTP1
M5_TOUCH_8P
PIN1 PIN2 PIN3 PIN4 PIN5 PIN6 PIN7 PIN8
J3
GH2.0-4P
PIN1 PIN2 PIN3 PIN4
C116 470nF/25V
C84 2.2uF/10V
C85 22uF 6.3V

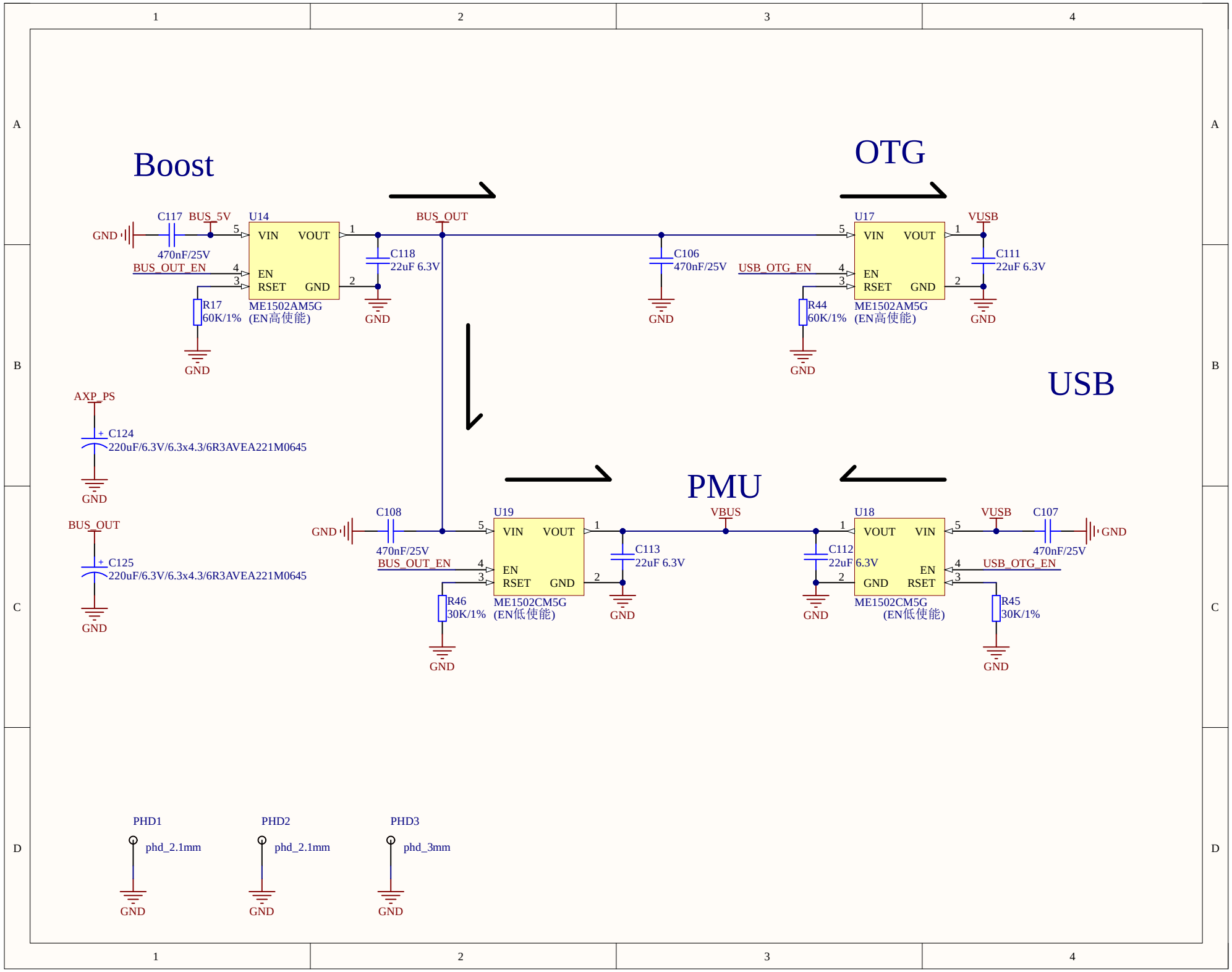
Boost
OTG
USB
PMU
C117
BUS_5V
U14
VIN
VOUT
EN
RSET
GND
470nF/25V
BUS_OUT_EN
R17
60K/1%
ME1502AM5G
(EN高使能)
C118
22uF 6.3V
BUS_OUT
C106
470nF/25V
U17
VUSB
USB_OTG_EN
R44
60K/1%
C111
22uF 6.3V
AXP_PS
C124
220uF/6.3V/6.3x4.3/6R3AVEA221M0645
C125
220uF/6.3V/6.3x4.3/6R3AVEA221M0645
C108
U19
R46
30K/1%
ME1502CM5G
(EN低使能)
C113
22uF 6.3V
VBUS
C112
22uF 6.3V
U18
C107
R45
30K/1%
PHD1
phd_2.1mm
PHD2
phd_2.1mm
PHD3
phd_3mm

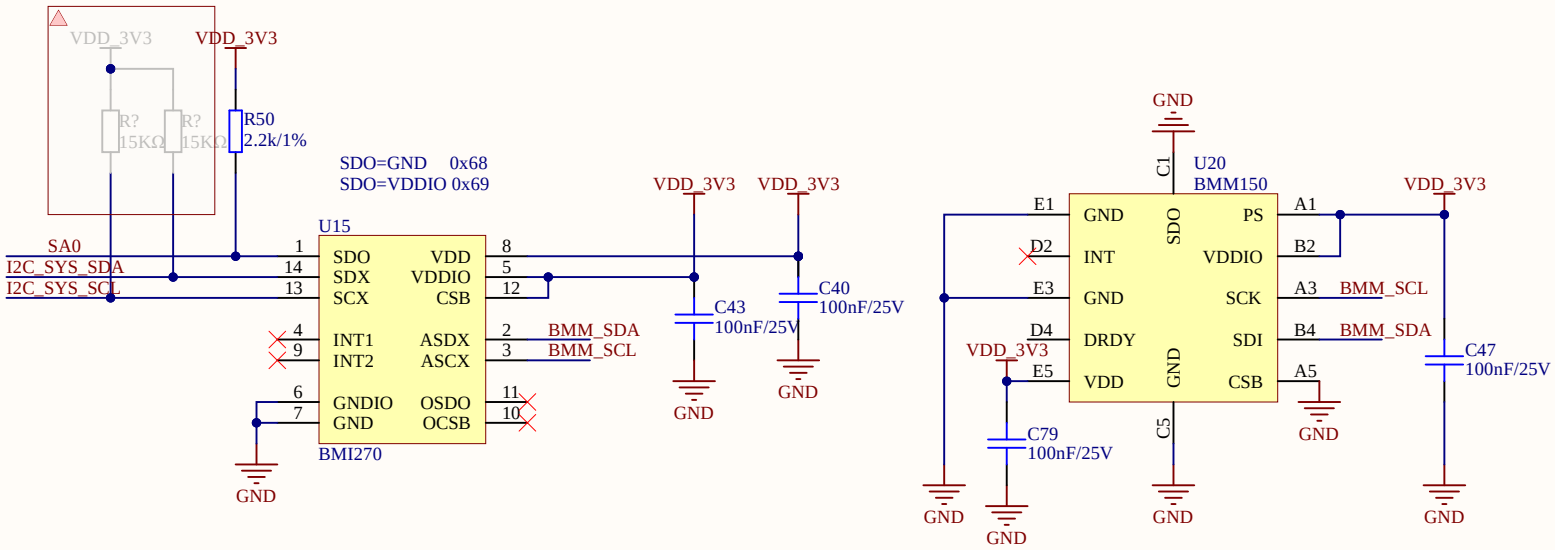
VDD_3V3
VDD_3V3
R?
15KΩ
R?
15KΩ
R50
2.2k/1%
SDO=GND 0x68
SDO=VDDIO 0x69
U15
SA0
I2C_SYS_SDA
I2C_SYS_SCL
1
14
13
SDO
SDX
SCX
VDD
VDDIO
CSB
8
5
12
4
9
INT1
INT2
ASDX
ASCX
2
3
BMM_SDA
BMM_SCL
6
7
GNDIO
GND
OSDO
OCSB
11
10
BMI270
GND
VDD_3V3
VDD_3V3
C43
100nF/25V
C40
100nF/25V
GND
GND
GND
C1
U20
BMM150
E1
D2
E3
D4
E5
GND
INT
GND
DRDY
VDD
SDO
GND
PS
VDDIO
SCK
SDI
CSB
A1
B2
A3
B4
A5
BMM_SCL
BMM_SDA
VDD_3V3
VDD_3V3
C47
100nF/25V
C79
100nF/25V
C5
GND
GND
GND
GND
GND
GND