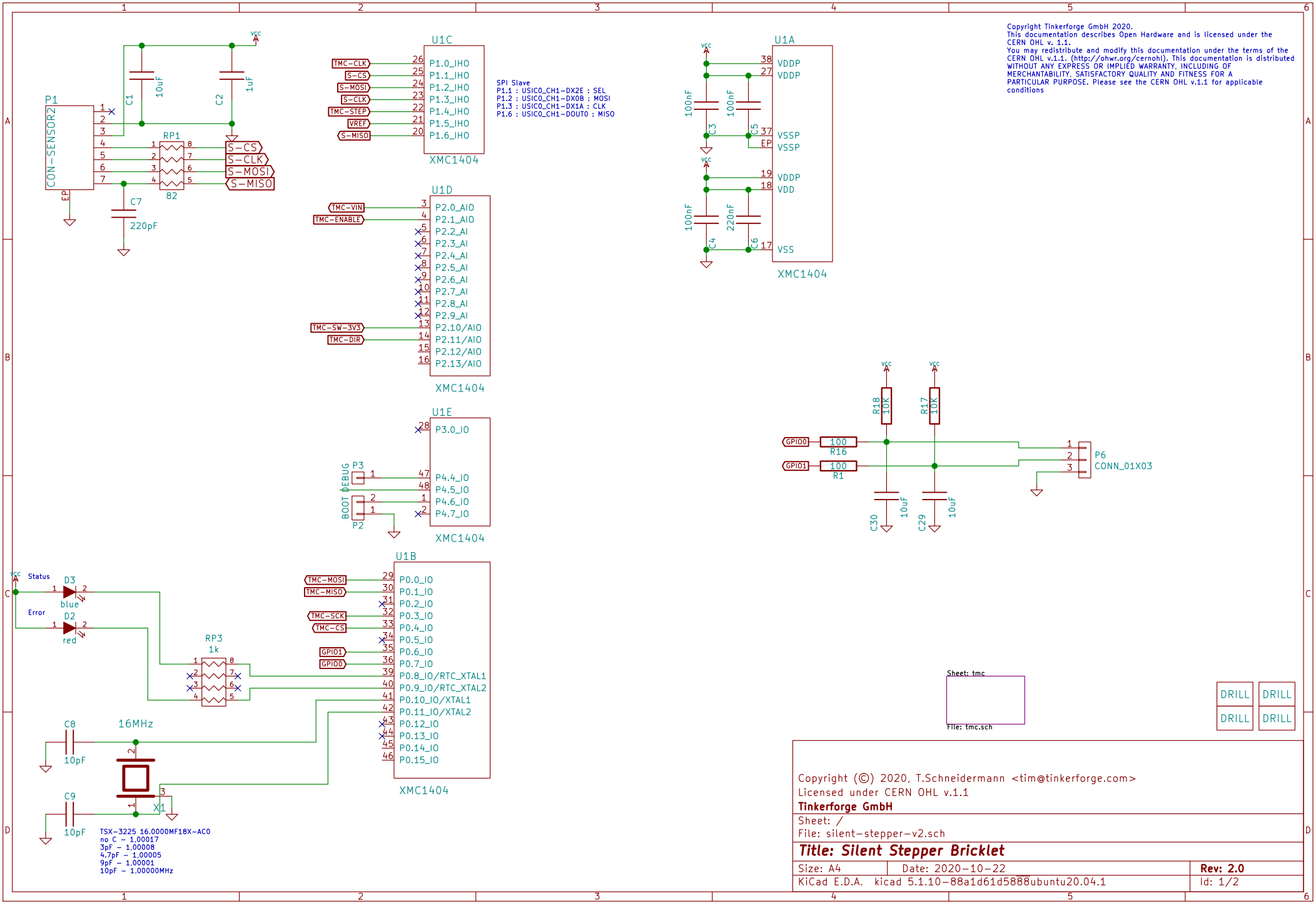

Copyright Tinkerforge GmbH 2020.
This documentation describes Open Hardware and is licensed under the CERN OHL v. 1.1.
You may redistribute and modify this documentation under the terms of the CERN OHL v.1.1. (http://ohwr.org/cernohl). This documentation is distributed WITHOUT ANY EXPRESS OR IMPLIED WARRANTY, INCLUDING OF MERCHANTABILITY, SATISFACTORY QUALITY AND FITNESS FOR A PARTICULAR PURPOSE. Please see the CERN OHL v.1.1 for applicable conditions

Copyright (©) 2020, T.Schneidermann <tim@tinkerforge.com>
Licensed under CERN OHL v.1.1

Tinkerforge GmbH

Sheet: /
File: silent-stepper-v2.sch

Title: Silent Stepper Bricklet

Size: A4	Date: 2020-10-22	**Rev: 2.0**
KiCad E.D.A. kicad 5.1.10-88a1d61d5888ubuntu20.04.1		Id: 1/2

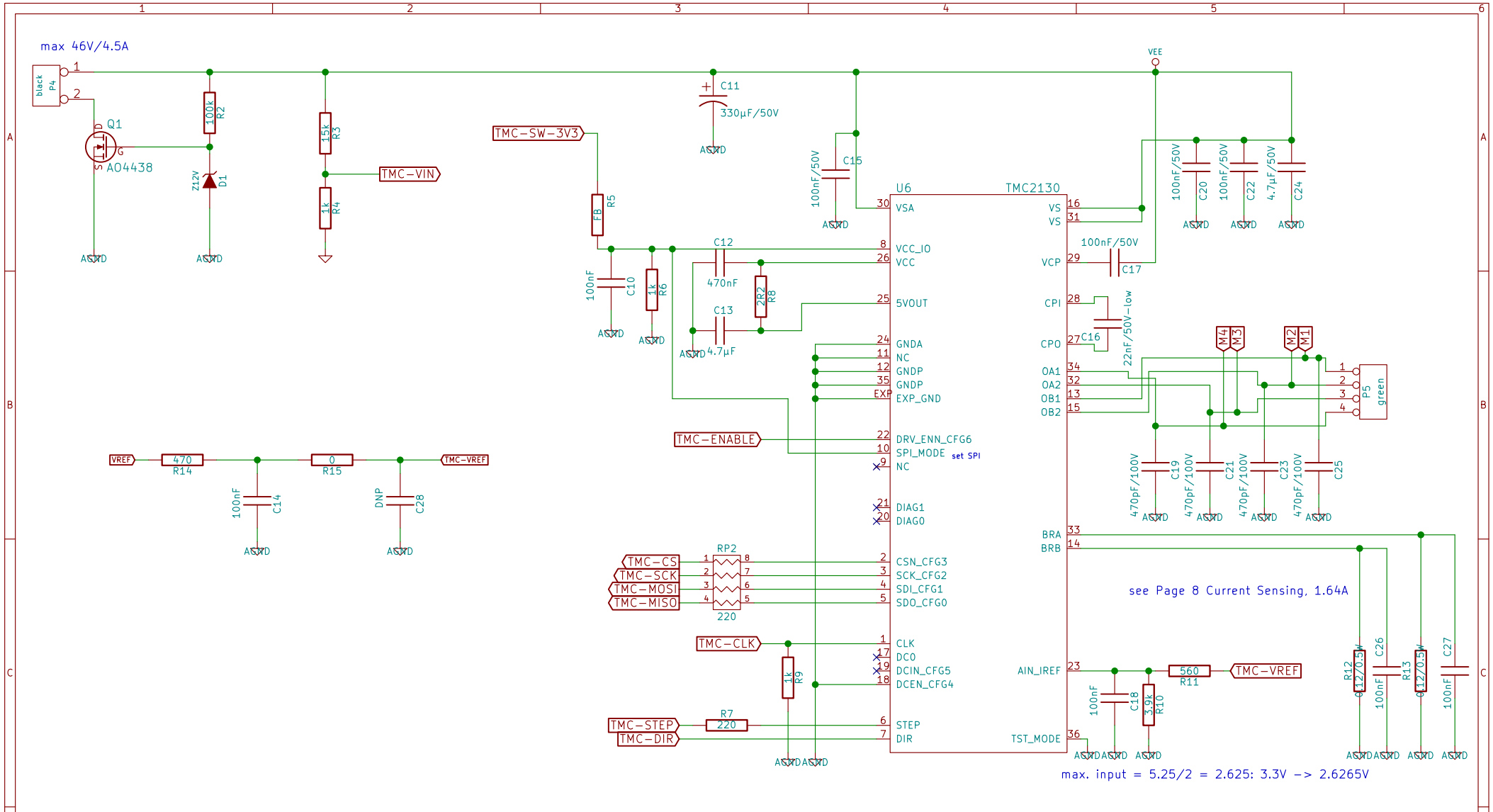

Copyright (©) 2020, T.Schneidermann <tim@tinkerforge.com>
Licensed under CERN OHL v.1.1

Tinkerforge GmbH

Sheet: /tmc/
File: tmc.sch

Title: Silent Stepper Bricklet

Size: A4	Date: 2020-10-22	**Rev: 2.0**
KiCad E.D.A. kicad 5.1.10-88a1d61d5888ubuntu20.04.1		Id: 2/2